MB120 and MB90

Moisture Analyzers

Professional Moisture Analyzers for Advanced Moisture Analysis

Measuring moisture content has never been easier than with the MB120 and MB90 Moisture Analyzers. Geared to increase precision and efficiency in the lab, these Moisture Analyzers feature a precisely-controlled halogen heating system which helps to yield fast and repeatable results with readability up to 0.01%. The robust housing and die-cast structure is designed for easy, tool-free cleaning and durability. An intuitive touchscreen icon-driven menu guides users through every step of the operation process.

Standard Features Include:

- **Define your Drying Parameters and Store Up to 100 Methods for Easy Recall**
  MB120's Temperature Guide helps to analyze a sample and determine the optimal drying temperature. You can store up to 100 methods and 1000 total results, for statistical analysis of measurements. Three levels of user management are available to meet individual user requirements and ensure data safety.
- **Increase Efficiency in your Lab with Fast Heating Halogen Technology**
  A precisely controlled halogen heating system distributes heat uniformly over the sample, ensuring fast and repeatable results. Four selectable drying profiles for easy one-step drying and seven shut-off criteria to automatically end the test (once moisture loss is no longer detected) are available in the MB120.
- **Effortless Cleaning with the Tool-Free Cleaning Structure**
  Designed with convenient maintenance in mind, no tools are required for cleaning these moisture analyzers. Simply remove the glass and tray to clean the sample chamber. The robust housing and die-cast base guarantee durability.
- **Operate Intuitively Using Icon-Based Navigation on the Color Touchscreen Display**
  You can access all of the MB120 and MB90's features and parameters on the easy-to-read color touchscreen display. The intuitive icon-based navigation guides users through every step of the operation process.

MB120 and MB90 Moisture Analyzers

Advanced Functionality

Test a wide variety of materials for a range of applications with MB120

- **Temperature Guide**
  Easily analyze a sample of a specific material and determine the optimum drying temperature.
- **100 Methods Library Makes Testing Faster**
  Program the parameters for up to 100 different types of samples, then select and run your test with the push of a button.
- **Store Up to 1000 Results for all Methods for Statistical Analysis**
  Quickly retrieve data and save to flash drive.
- **Three-Level User Management**
  Set up and lock temperature settings and methods parameters with admin access, so users can't modify settings.

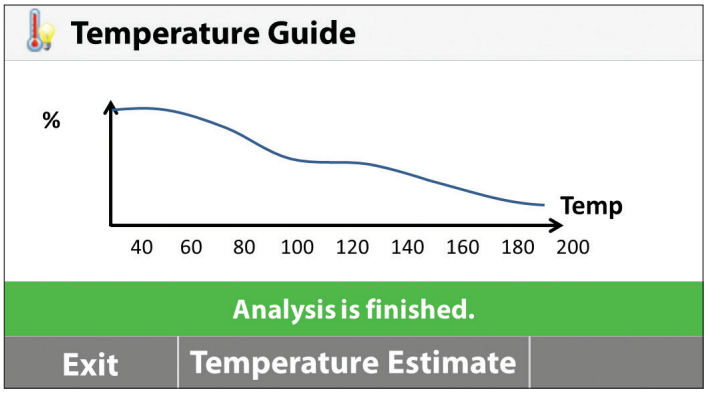

Temperature Guide

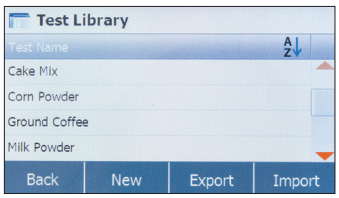

Method Library

Results Storage

Testing Made Simple

The MB Series features a wide, bright touchscreen display and intuitive menu navigation for fast, accurate moisture analysis.

- **Touchscreen Display**
  Easy to read and understand
- **Icon-Driven Menu Navigation**
  Easy to follow, with no training required
- **4 Mechanical Keys for Fast One-Step Operation**
  Tare, Start/Stop, Print, On/Off
- **USB and RS232 Ports**
  Quick connections to a PC or flash drive
- **Moisture Analysis Made Simple**
  Just 3 easy steps for routine sample testing!

  1. Tare empty sample pan
  2. Add sample according to best practices
  3. Press start and see your results!

Moisture Analysis Made Simple—and Powerful!

Exceptional Precision

The MB120 and MB90 provide precise results for more confident testing.

- **Fast Infrared Halogen Heating Technology**
  Halogen heating dries samples in seconds and performs up to 40% faster than traditional Infrared methods.
- **Uniform Drying for Precise, Repeatable Results**
  The reflective sample chamber ensures uniform heating of each sample to yield reliable results of 0.01% readability.
- **Flexible and Powerful**
  Features a full operating temperature range of 40–200 °C (MB90) or 40–230 °C (MB120) in 1 degree increments.
- **Four Drying Profiles to Ensure Accuracy (MB120)**
  Customize heating of specific samples with temperature control for one-step drying—set temperature and time and begin!

  Fast: Quickest possible time to temperature

  Standard: Minimal overshoot while achieving temperatures quickly

  Ramp: Controlled ramping to temperatures

  Step: Set three temperatures at three time intervals
- **Shut-Off Criteria for Automatic Test Completion (MB120)**
  Customize your own test endpoint criteria to automatically end the test once moisture loss is no longer detected. Choose from up to 7 criteria—Manual, Timed, AutoFree percent weight loss per second, AutoFree mg loss per second, A30, A60 and A90.

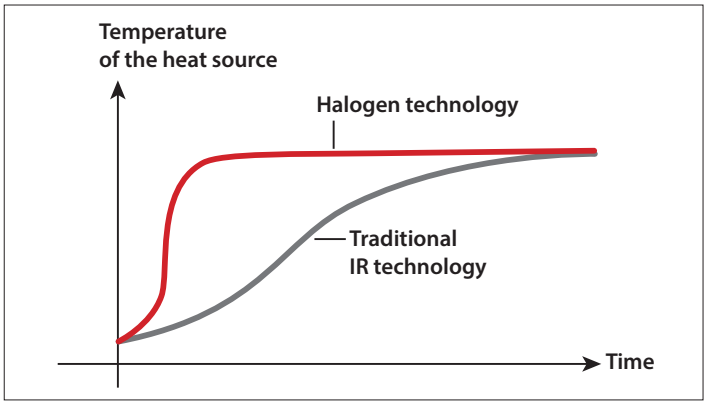

Fast Heating Time

Uniform Drying

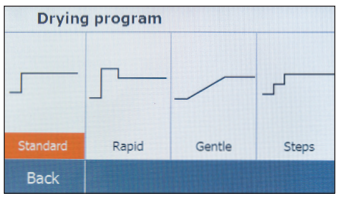

Four Drying Profiles

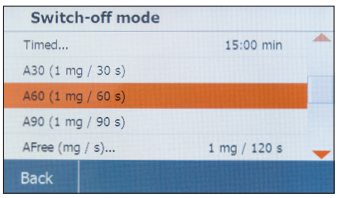

Customized Endpoints

Easy Tool-Free Cleaning

The MB120 and MB90 feature a patented pan handler and removable parts for convenient maintenance.

- **Stainless Steel Drying Pan**
  Wipe down quickly
- **Removable Heating Chamber Components**
  No tools required—simply remove glass and tray to clean

MB120 and MB90 Moisture Analyzers

Model	MB120	MB90
Capacity	120 g	90 g
Readability	0.01 %/0.001 g	0.01 %/0.001 g
Repeatability (Std Dev) (g)	0.05 % (3 g sample) 0.015 % (10 g sample)	0.18 % (3 g sample) 0.02 % (10 g sample)
Moisture Range	0.01 % to 100 % (0.01 % to 1000 % for regain mode)	0.01 % to 100 % (0.01 % to 1000 % for regain mode)
Output	RS232, USB host, USB device	
Heating Element	Halogen	
Temperature Range	40–230 °C	40–200 °C
Power	120 or 240 VAC 50/60 Hz	
Operating Temperature Range	10–40 °C	
Display Type	109 mm, QVGA, TFT touch screen	
Display Results	%moisture, %solids, %regain, time, temperature, weight, method name, drying curve and statistics	
Pan Size	90 mm	
Dimensions (W × H × D)	210 × 180 × 350 mm	
Net Weight	5.23 kg	
Shipping Weight	8.35 kg	

Compliance

- **Models are CE, UL listed, CSA approved and FCC approved**

Additional Features—MB120

ABS top housing, stainless steel pan support, stainless steel metal pan handler, in-use cover, 7 shut-off criteria (manual, timed, autofree %/s, autofree mg/s, A30, A60 and A90), 4 heating profiles (standard, fast, ramp and step), 40–230 °C heating temperature range (1 °C increments), 13 operational languages (display only, no key in)

Additional Features—MB90

ABS top housing, stainless steel pan support, stainless steel pan handler, in-use cover, 3 shut-off criteria (manual, timed or auto), 2 heating profiles (standard and fast), storage up to 2 methods and user guide, 40–200 °C heating temperature range (1 °C increments), 13 operational languages (display only, no key in)

Accessories

Pan Holder, MB90 MB120..... 30246947
In-Use-Cover, Accessory, MB90 MB120 30284478
Scoop, Accessory, MB90 MB120 30284477
Temperature Calibration Kit 11113857
Anti-Theft Device, MB AX EX..... 80850043
Pan, Aluminum, Set(80), MB Series 80850086
Filter, Glass Fiber, Set(200)..... 80850087
Cage, Sample, MB Series..... 80252477
Pan, Reusable, Set(3), 7mm, MB Series..... 80252478
Pan, Reusable, Set(3), 14mm, MB Series 80252479
Printer, Impact, SF40A..... 30045641

Outline Dimensions

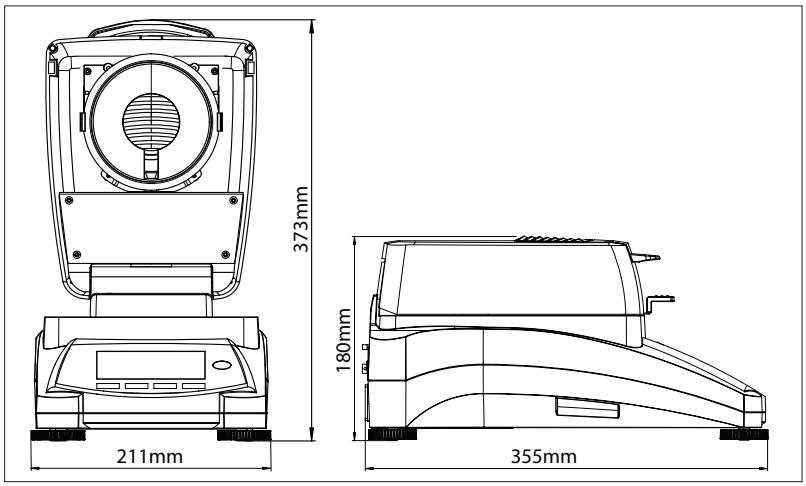

OHAUS CORPORATION
*7 Campus Drive
Suite 310
Parsippany, NJ 07054 USA

www.ohaus.com

With offices throughout Europe, Asia, and Latin America

***ISO 9001:2008**
Registered Quality Management System

30295305

80774980 © Copyright OHAUS Corporation